Chapter 7: Manufactured Home Weatherization

7.1 Manufactured Home Weatherization

Manufactured homes, also known as mobile homes, present unique weatherization opportunities and challenges. Often, mobile home weatherization practices differ from the practices for site-built dwellings. Mobile homes typically use more energy per square foot than site-built homes, but their standard construction makes them more straightforward to weatherize. Insulation retrofits, air sealing, duct sealing, and heating-system replacements present some of the best energy-saving opportunities in mobile homes.

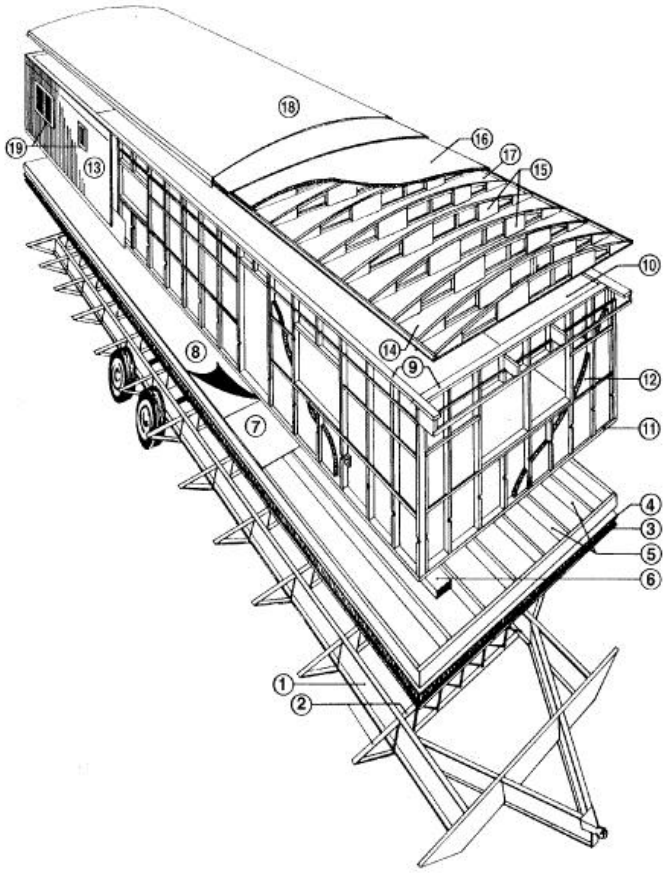

Typical Components of a Mobile Home: 1–Steel chassis. 2–Steel outriggers and cross members. 3–Underbelly. 4–Fiberglass insulation. 5–Floor joists. 6–Heating/air conditioning duct. 7–Decking. 8–Floor covering. 9–Top plate. 10–Interior paneling. 11–Bottom plate. 12–Fiberglass insulation. 13–Metal siding. 14–Ceiling board. 15–Bowstring trusses. 16–Fiberglass insulation. 17–Vapor barrier. 18–Galvanized steel one-piece roof. 19–Metal windows.

7.2 Supply Distribution System

Mobile home supply ducts often leak significantly, presenting an excellent opportunity for savings through effective duct sealing. Sealing the duct work should be completed prior to any repair work to the belly or insulating of the belly. Many leakage points in the system are most easily accessed from the belly to complete the duct sealing.

Visually inspect ducts and registers using a digital camera, Boroscope, or mirror and flashlight to identify large holes, gaps or disconnected sections. Take photos by placing the camera (with the strap around the wrist) inside of the ductwork.

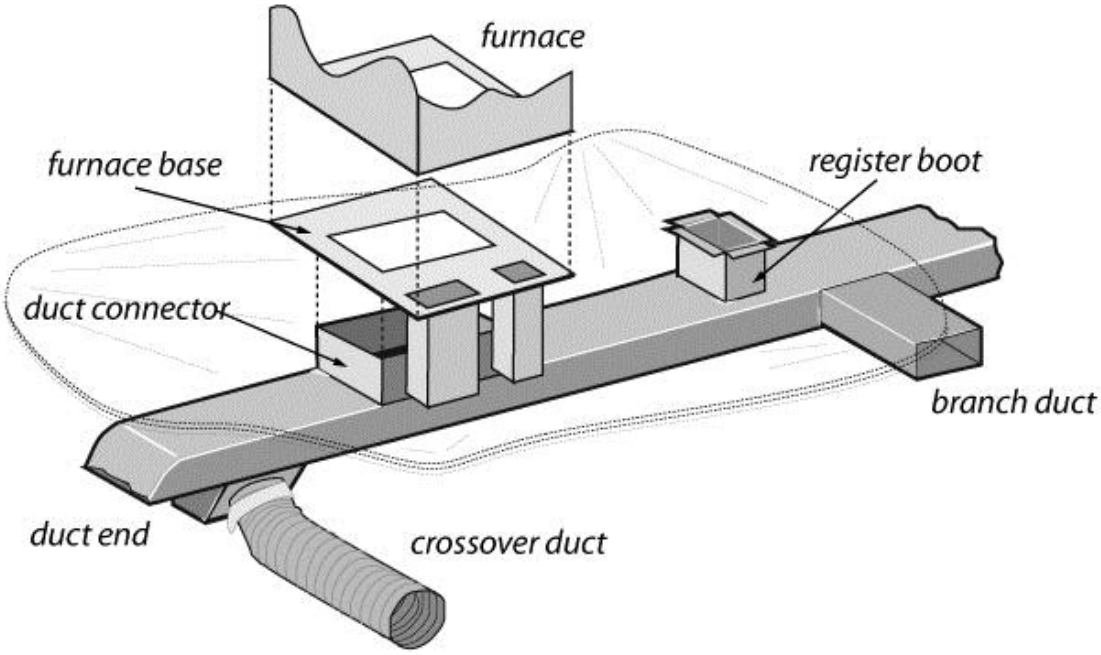

Mobile home ducts: Mobile home ducts leak at their ends and joints—especially at the joints beneath the furnace. The furnace base attaches the furnace to the duct connector. Leaks occur where the duct connector meets the main duct and where it meets the furnace. Branch ducts are rare, but easy to find, because their supply registers aren't in line with the others. Crossover ducts are found only in double-wide and triple-wide homes.)

7.2.1 Pressure Pan Duct Testing

To measure the relative leakiness of the forced-air distribution system, complete the following steps:

1. Set up mobile home in winter condition, with all interior doors open.
2. Set the digital gauge to “PR/PR” and connect a pressure hose from a reference tap to outside. Measure the baseline House with respect to Outside (HwrtO) pressure. Turn on the blower door fan, and create a 50 pascal pressure difference HwrtO adjusted for baseline.
3. Disconnect the outdoor pressure hose from the digital pressure gauge. Connect a pressure hose from an input tap to the pressure pan.
4. Go to the supply register located furthest from the furnace on one end of the mobile home. Place the pressure pan over the register and record the pressure difference on the electronic workbook.

    4a. If the positioning of the register does not allow the pressure pan to form an airtight seal, other materials (duct mask, cardboard, etc.) may be used to create an airtight seal around all edges of the register. After developing an airtight seal, attach a metal pressure probe to the end of the hose. Puncture a small hole in the sealing material, insert the metal probe into the hole, and record the pressure difference.

5. Repeat Step 4 (4a) at all remaining registers in the home.

7.2.2 Interpreting Duct Leakage Results

In a perfectly sealed duct system, no pressure difference will exist between the ducts and the main body of the home. When duct leakage exists, it allows air to infiltrate the ductwork; and this infiltration causes the pressure difference measured between the supply ducts and the main body of the home. The more duct leakage that exists, the higher the pressure difference between the ducts and the home’s interior.

If ducts on one side of the home exhibit higher pressures than ducts on the opposite side, substantial duct leakage exists in the general vicinity of those higher pressure ducts, rather than at each duct individually. If such a discrepancy is observed at the ducts surrounding the furnace, this may indicate a need for duct sealing on the ductwork and connections near the furnace.

7.2.3 Mobile Home Duct Sealing

Seal supply ductwork located in the mobile home belly so that cumulative pressure pan readings of all registers is 3 pascals or less, when the home is at 50 pascals with respect to outside. When duct sealing does not reduce the cumulative reading to 3 pascals or less, document reason(s) on the electronic workbook.

The following locations are typically sealed from inside the mobile home:

1. **Furnace to plenum connection:** Access this area by removing the A-coil access panel when no central air conditioning is present. Apply butyl tape and/or mesh tape over small to medium holes and then apply a thick coat of mastic over both. To seal larger holes, attach sheet metal with fasteners taking care to seal the edges using mesh and mastic. Small holes and seams can be sealed with mesh and mastic or mastic alone. Mesh is applied over all butyl tape, overlapping onto the ductwork to assure a lasting seal. Since the temperature at this location can be very high, we recommend using materials other than butyl tape such as step-flashing cards, whenever possible. Butyl tape sags and loses its adhesive properties fairly quickly at elevated temperatures.
2. **Register risers (collars) to floor and trunk:** Secure riser to trunk and/or floor before sealing connections. Large gaps can be covered with step-flashing cards. Be sure to sandwich mastic between the card and ductwork to obtain a permanent seal. Take care when sealing the riser to the top of the floor covering to allow the register room enough to seat correctly. Do not extend the tape beyond the lip of the register. As with all applications, butyl tape should be covered and overlapped with mesh tape and mastic, completely imbedding all exposed butyl tape; however this may not always be possible at the top of risers.
3. **In-floor trunk lines:** Short pieces of pre-formed J-channel work well to hold collarless trunks tight to the floor before sealing with mastic. Trim channel as needed to ensure that it is covered by the register.
4. **Terminal registers:** Often the ends of trunk runs do not have blocking present. Install a “scoop” or blocking after the last register when it will not cause the air-distribution to become imbalanced. The scoop is constructed of sheet metal and is sealed to the exterior, as per normal procedures. Ductwork is normally constructed to provide static pressure, which equalizes flow. When scoops are installed, they reduce the ability to create static pressure and the result is increased flow out of the scooped register. If the scoop is in a room already getting adequate air, comfort and pressurization issues may arise.

The following locations are typically sealed from under the mobile home. The road barrier (belly) may need to be cut open to gain access to the duct work.

1. **Trunk to crossover duct on double-wide mobile homes**: Generally constructed of insulated flex-duct, the inner sleeve shall be mechanically secured and sealed to the starter collar of the main trunk. This is usually accomplished with strap ties or large diameter hose clamps. Sealing is generally performed with mastic, as no holes are assumed to exist. The outer sleeve is then secured to the trunk or road barrier but does not need to be sealed.
2. **Plenum to trunk connections when central AC is present**: The trunk is opened directly below the furnace. It is recommended this piece be removed and replaced with an over-sized piece of sheet metal that is either mechanically fastened to the inside or outside of the trunk. Placing the piece on the inside of the trunk assures it will never sag or fall out. As with all metal to metal connections, sandwich them with mastic. Sealing is performed in the same manner as #1 above.
3. **Take-offs from main trunk to side registers:** These connections can only be accessed from the below the mobile home. They are particularly leaky in duct-board trunk lines. Seal using the same materials and methods as used for collars and risers.
4. **Ends of trunk runs, abnormal leaks, anomalies, and any seams between sections:** The seams and other unusual leaks can be very difficult to locate. It is recommended that the technician physically inspect all ducting whenever possible, to find these leaks that may not otherwise be addressed. Seal as appropriate for the wide-range of conditions that may be encountered.

7.3 Return Air Distribution System

Eliminate floor and ceiling cavities used as return air plenums in favor of having return air flow through the hallway directly into the furnace.

To eliminate a belly return-air system:

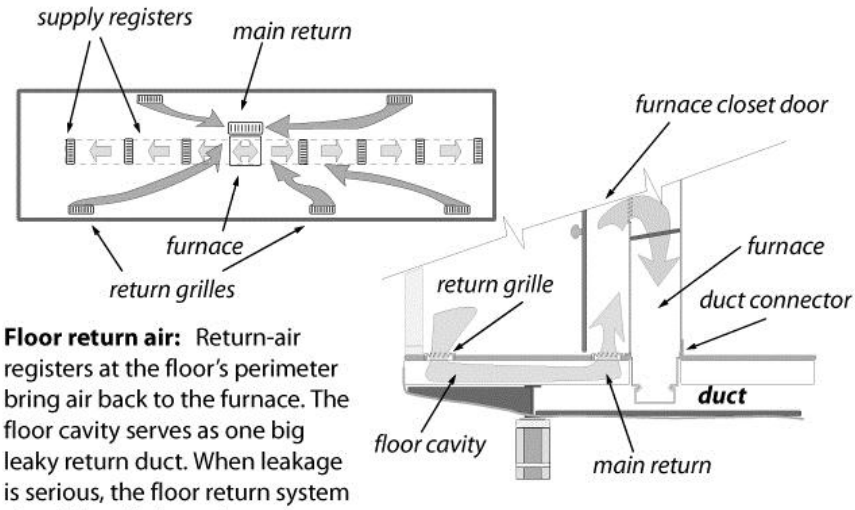

Floor return air: Return-air registers at the floor's perimeter bring air back to the furnace. The floor cavity serves as one big leaky return duct. When leakage is serious, the floor return system should be eliminated.

1. Block all floor return registers with a durable and tight air barrier, being careful to find hidden return registers under built-ins, behind furniture, and in kitchen kick-spaces.
2. Block all floor openings completely in the furnace closet, being careful to not seal the combustion air inlet.
3. Install grilles or louvered door to provide furnace manufacturer's recommended net free area in the furnace closet door.
4. Measure the fan flow and temperature rise of the system, to confirm that airflow is within the manufacturer's specifications.

7.3.1 Measuring Temperature Rise

The heating system's temperature rise should be within the range specified on the manufacturer's label. If no manufacturer's information is available, confirm that the temperature rise is between 40° and 80° F.

To test the temperature rise of a mobile-home heating system:

1. Inspect the plenum/furnace joint before measuring the temperature rise. Repair this joint, if needed, completing testing.
2. Make sure all interior doors are open, except the furnace closet door.
3. Close the furnace closet door completely.
4. Turn on the furnace and allow the supply air temperature to stabilize. Measure supply temperature at the register closest to the furnace, making sure that the airflow to this register is not blocked and that there is no significant duct leakage between the furnace and the thermometer.
5. Subtract the house air temperature – the return air – from the supply air temperature. The difference is the temperature rise.

If the temperature rise is too high or too low, investigate for restrictions to airflow or remaining duct leakage. The fan speed may be adjusted to bring the temperature rise within the acceptable range.

7.3.2 Measuring Room Pressure Differences

When interior doors are closed while the heating system operates in a mobile home, the supply air pressurizes the room and creates a pressure imbalance between the room and the main body of the home. This room-to-house pressure difference leads to increased air exfiltration through the room's primary pressure boundary. Mitigating or eliminating the

room-to-house pressure differences saves energy by reducing air leakage through the room's primary pressure boundary.

To measure individual room pressure differences:

1. Start/Operate furnace air handler.
2. Measure the pressure difference across each interior door, one at a time. Place a hose inside the room away from the supply register and connect to the input tap of the manometer. Close the door making sure the hose is not pinched or restricted. Record the room pressure with respect to house on the electronic workbook. If the room does not have a supply register, do not measure it.
3. Rooms with a measured pressure of greater than 3 Pa are excessively pressurized and are not well connected to the house and do not provide the necessary path for return air. A connection between the room and house can be achieved by the following:
   a. Undercut the door (usually this is the most cost effective option),
   b. Install a grille in the door, or
   c. Install a jumper duct under the floor.

After determining the size of the opening needed to lower pressurization, consult with the homeowner as to the best option for their situation. A simple method to determine the size of the opening needed to lower the pressurization in a room is to open the door slowly while measuring the pressure difference across the door until the pressure difference is 3 pascals or less. Measure the square inches of the opening created. This is the minimum net free area of room-to-house opening required to reduce the pressure difference to 3 pascals or less.

> ***Example:*** The door is opened by 2 inches, and the door is 80 inches tall. The net free opening to be added would be 160 square inches. Divide this area by the width of the door to determine how many inches need to be cut off the bottom of the door. An example would be 160/32 or 5 inches.

7.4 Floor/Belly Insulation

Mobile home existing floor cavities are usually insulated with wide fiberglass blankets, attached to the bottom of the 2-by-6 floor joists. Therefore, the entire 2-by-6 cavity is itself un-insulated. In floors with transverse floor joists (following the width of the home), the duct is attached to the bottom of the 2-by-6 floor, resulting in a dropped belly. This enlarged floor cavity can require an excessive amount of insulation, unless technicians can pin the belly material up to the floor joists to reduce the belly's volume. Average insulation densities for loose fill insulation installed in mobile home bellies will be 1.25 to 1.75 pounds of blown fiberglass per cubic foot. Do not dense-pack or over-fill this area.

7.4.1 Preparations for Belly Insulation

The crawl spaces of mobile homes vary in their accessibility. Mobile homes normally have a "road barrier" of fiberboard or tough fabric that protects the floor from rodents and road dirt during transport. Damage to this barrier is common, and results in air leakage.

Before installing belly insulation, follow these preparatory steps:

1. Confirm that no water or sewer leaks are present. If leaks are discovered, contact the energy auditor or project supervisor for guidance on how to proceed.
2. Complete duct sealing (see section 7.3) and non-guideline air sealing around floor penetrations (see section 7.7) before installing floor insulation.
3. Install ground-moisture barrier based on site conditions. A vapor barrier may be used to provide a working surface for installers and ground moisture control. Be cautious when site conditions may cause surface water under the mobile to pool on top of this barrier.
4. Secure water pipes up as close to the floor joists as possible, so that insulation will fill beneath them. Ensure that plumbing pipes are located on the interior (warm) side of the thermal boundary, to prevent frozen pipes. If this is not possible, insulate the pipes separately or insulate the belly underneath pipes, leaving the space above the pipes un-insulated to allow ambient heat from the home to warm the pipes and prevent freezing.
5. With flexible dropped bellies, try to fasten the belly material to floor joists in order to eliminate excess volume of the belly.
6. Repair holes in the belly, except those that provide convenient access for blowing insulation. Fasten belly patches with adhesive, clinch staples, screws and lath strips, to provide durable patches. For large holes in road barriers, preferred patching materials include insulated sheathing board, fiberboard, 2-part foam, and nylon reinforced mesh specifically manufactured for mobile homes.

7.4.2 Insulating the Belly from Underneath

Blowing insulation into the belly with a large diameter fill tube from underneath is an effective installation method. The conditions underneath the home determine whether this option should be considered. A ground moisture barrier makes installing the insulation more comfortable for the installer. Insulation can be blown through existing holes in the road barrier before patching them. Installers should note where insulation has been installed and where it has not been installed. Some of the floor areas usually may only be accessible from underneath if they are to be filled at all.

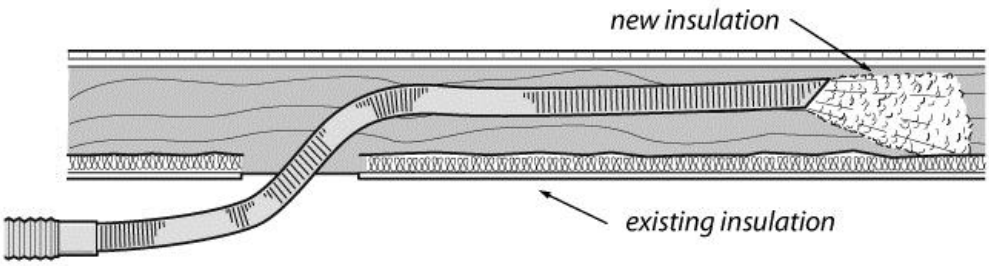

Blowing bellies: A flexible fill-tube, which is significantly stiffer than the blower hose, blows fiberglass insulation through a hole in the belly from underneath the home.

Fill tube inserted into belly hole

Blowing from under the home: A large diameter fill tube fills cavities rapidly from underneath.

7.4.3 Rim Blow through Rim Joists

Blowing insulation through the rim joist is another installation method. However, rim joists may not be drilled if they are determined to be a structural component of the foundation support system or if floor joists are 24 inches or greater on center. Drilling can be dangerous without a good drill and a sharp bit. To avoid weakening the door threshold, do not drill beneath doors. Do not drill directly through trim covering rim joist. Use wooden plugs to seal holes drilled in the rim joist. When possible, substitute the wing blow (see *Wing Blow in Chapter 7 - Section 7.4.4*) to avoid structural problems.

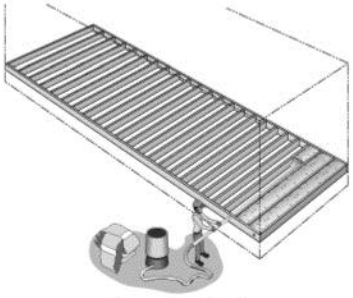

Crosswise joists

Insulating through the rim joist: Mobile homes have either lengthwise

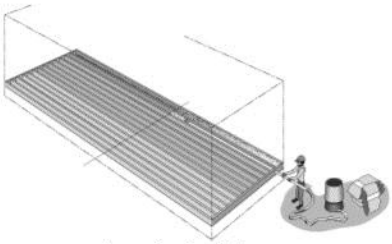

Lengthwise joists

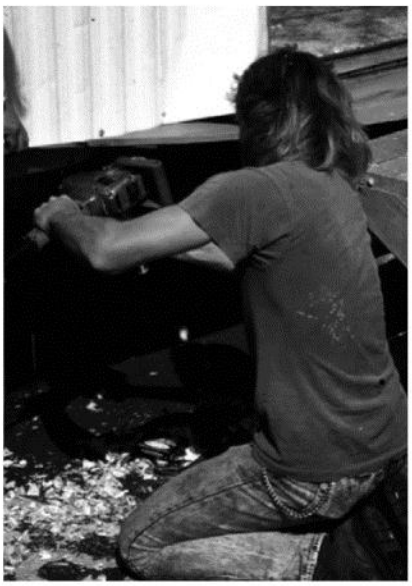

Drilling the rim joist: Successful drilling requires a good drill, a sharp bit, and a steady hand

7.4.4 Wing Blow

Blowing insulation through the belly at the wing is a variation of the rim joist blowing technique. This method has some of the advantages of blowing from underneath and blowing through the rim joist. Specific areas, notably the floor cavity between the hole and the installer, need to be insulated using a shorter flexible fill tube. If bellies cannot be insulated through the rim joist and must be insulated from the wing or underneath, the use of a large diameter fill tube is preferred.

7.5 Attic/Ceiling Insulation

Existing mobile home roof cavities seldom contain adequate insulation. Fiberglass batts or blankets are usually present in the narrow roof cavity, but there is typically room for additional insulation. The space available typically varies from 1 or 2 inches along the building's edge, up to 10+ inches in the center for homes with bowstring trusses. Lightweight sloped-roof trusses provide up to 3 inches at the edge and up to 2 feet at the center. Crews use a variety of methods to insulate mobile home roof cavities, depending on the characteristics of the roof cavity, personal methodology preferences, and conditions on site. Install insulation at uniform coverage and density between 1.25 and 1.75 pounds per cubic foot. Typically it is more difficult to insulate the edges of the attic, so ensure that insulation covers these areas.

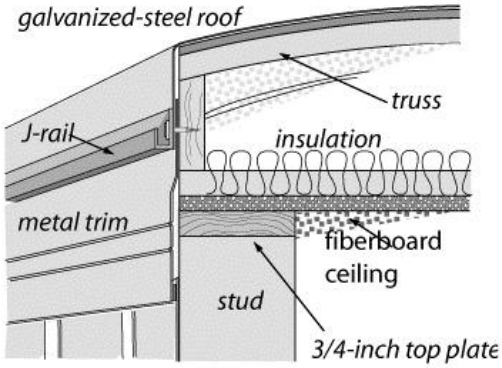

Bowstring roof details: Hundreds of thousands of older mobile homes were constructed with these general construction details.

7.5.1 Preparing For Ceiling Insulation

Inspect the ceiling and roof to determine if conditions allow for adding insulation. It is important to perform repairs, as needed, to reinforce the ceiling.

Before installing ceiling insulation, follow these preparatory steps:

1. Hold insulation 3 inches back from recessed light fixtures, fan and heater housings, and chimneys that aren't insulation-contact (IC) rated. IC-rated light and fan fixtures may have insulation surrounding them. Chimneys with zero-clearance thimbles can also contact insulation.
2. Complete non-guideline air sealing around chimney bypasses above the heating system and water heater if present.
3. Inspect for ceiling openings in closets and cabinets, and confirm that insulation will not spill down through the ceiling into these areas.
4. Seal bypasses. If accessibility restrictions prevent air sealing, document the reason(s) in the customer file.
5. Mark the fill tube at 1 foot increments. If the edge is 7 feet from the hole, insert the fill tube to the 7 foot mark; if the fill tube doesn't go in far enough, try again.

7.5.2 Blowing the Roof Cavity from the Roof

Blowing from a Square Hole

Cutting a 10-inch-square hole directly over a truss gives access to two joist cavities and enough room to maneuver a 2-inch diameter fill tube. This large fill tube allows for a fast fill rate. Patch the hole with a 14-inch-square piece of stiff galvanized steel sheeting, sealed with roof cement and screwed to the roof with sheet-metal screws. Cover the patch with an 18-inch-square piece of peel & seal butyl-aluminum roofing.

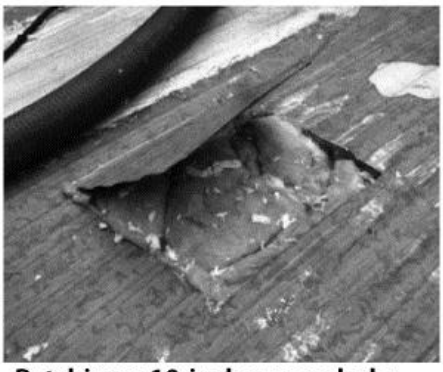

Patching a 10-inch square hole: First the hole is stuffed with fiberglass batt to make it stand high. Then a sheet metal patch is attached followed by another patch of a butyl-aluminum-foil.

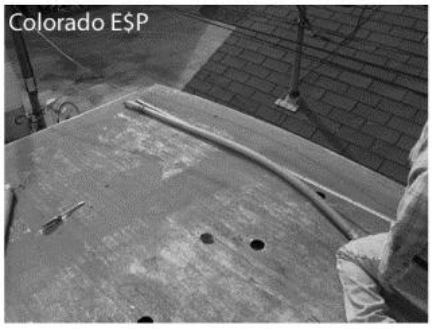

Blowing through 2¹/₂ inch holes: This method often works well with a smaller-diameter fill tube. Patches are caulked plastic plugs covered by aluminum-foil-asphalt squares.

Blowing the Roof Cavity through Round Holes

Some technicians prefer drilling smaller holes to cutting the large square holes. This method requires using a smaller diameter fill tube to fill the roof cavity. The holes are filled with plastic plugs, sealed with silicone caulking. The plugs are covered with 6-inch-square patches of peel & seal. With this method, the holes are easier to patch. However, there are more holes.

7.5.3 Blowing a Pitched Roof

Pitched roofs are common in double-wide mobile homes. More volume exists under these roofs than in a metal-roofed single-wide mobile home. The density will be lower than when blowing the narrower, more airtight cavities (<= 0.6 lb/cf) and the cavity does not need to be completely filled to the peak. These roof cavities are accessible from roof vents or the gable end.

In double-wide mobile homes adequate clearance may exist to insulate the ceiling cavity as an open blow. Access to the ceiling cavity can be gained through the gable end by removing the siding panels. Planking is usually necessary to distribute the weight of the installer and to make moving among the webbed trusses easier.

7.5.4 Blowing the Roof Cavity from the Edge

Metal roofs on mobile homes are usually fastened only at the edge, where the roof joins the wall. When there is clear access along one long side of the home, this method can result in a fast and effective fill with minimum disturbance to the roof. This procedure requires scaffolding in order to be performed safely and efficiently, because of the weight and length of the tube.

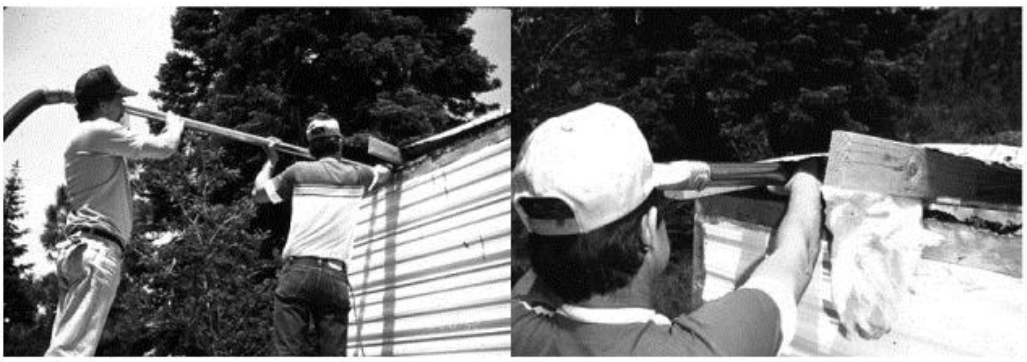

Roof-edge blowing: Use a rigid fill tube to blow insulation through the roof edge. This avoids making holes in the roof itself, though this process requires much care in refastening and re-sealing the roof edge.

Carefully re-seal of the roof edge after insulating the cavity. The best way to re-fasten the roof edge is to seal it to the framing with new putty tape and staple it with an air-powered stapler, the way it was originally fastened. Also seal the J-rail with putty tape, and re-screw it with larger sheet-metal screws.

7.5.5 Interior Drill and Blow

Drilling holes and blowing insulation into the roof cavity through a fill tube from the interior is a good procedure for inclement weather or when the exterior condition of the roof will not support other methods. The larger the hole, the easier it is to maneuver the tube out to the edge of the roof cavity. Use a plastic plug that matches the hole size. Use care not to damage the hole because the

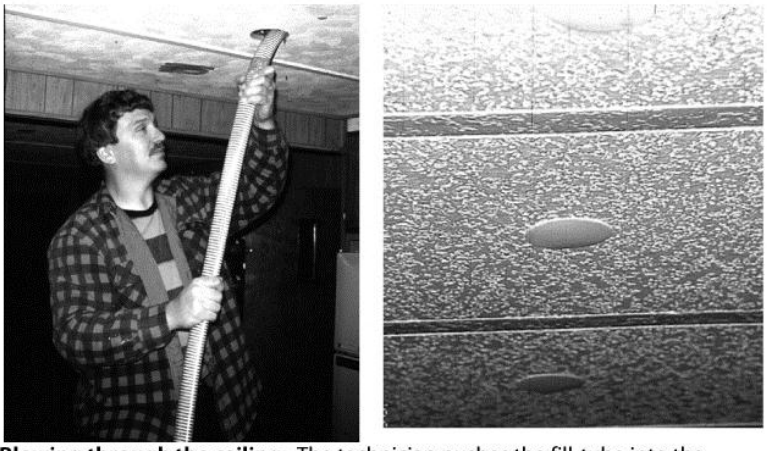

Blowing through the ceiling: The technician pushes the fill-tube into the cavity and out near the edge of the roof. The holes are drilled in a straight line for appearance sake.

edge of the plug won't hide very much damage around the hole. If all of the holes are drilled in-line, trim board may be attached to hide the drill holes.

7.6 Sidewall Insulation

The sidewalls of many mobile homes are not completely filled with insulation. This reduces the R-value of the existing insulation because of convection currents and air leakage.

Before installing sidewall insulation, follow these steps:

1. Make sure the customer is aware of any pre-existing damage to the walls, and also the potential damage that can occur from insulating the walls.
2. Remove pictures and wall hangings from the interior walls. Re-hang pictures and wall hangings after insulating the walls.
3. Add nails or screws to interior paneling and trim as necessary to reinforce interior walls.

Checking walls: Measure the cavity and the existing insulation level. Make sure wall outlets work before and after installation.

4. Inspect the electrical system to determine if the wiring and circuit breakers or fuse box are adequate. Check the area around wall switches and outlets to determine if there is evidence of past electrical problems.

   Do not insulate the walls if the wiring is in poor condition. If the wiring is poor in a specific area, contact the energy auditor or site supervisor for guidance on how to proceed. Document the conditions in the customer file.

If aluminum wiring is present, take the following precautions:

   a. Mark cavities with outlet, switch, or light fixture on the outside siding. These cavities should be carefully tubed rather than stuffed with a batt; or, if excessive movement of the wires will still occur, then the cavity should not be insulated.

b. Test each outlet, switch, or light fixture to confirm that it is operating properly before insulating. Re-test afterward.

7.6.1 Preparing Siding for Wall Insulation

Metal siding on mobile homes is typically installed vertical. Most metal-sided mobile homes have horizontal rows of screws, which attach siding to horizontal 1-by-2 belt rails. Remove the bottom two rows when using the wall stuffing technique. To use the sidewall blowing technique, remove only the bottom row of siding. The metal siding joins piece to piece, with the first piece sliding inside a crimped channel in the second piece. It's better for this joint to remain together. Fastening a short sheet metal screw through the two sheets keeps them together during the insulation process.

Loosening siding for wall insulation: Remove screws at the bottom of the metal siding. Before installing insulation, fasten the siding sheets together at the bottom with a short sheet-metal screw.

Occasionally, mobile-home siding is horizontal instead of vertical. To insulate these cavities, simply remove the bottom row of siding. Reinstall the siding when the insulation work is complete.

7.6.2 Sidewall Blowing Technique

Blowing insulation into mobile-home sidewalls is similar to insulating sidewalls of site-built homes, although the fiberglass insulation is installed at a lower density. Take care not to create bulging walls during installation.

Insulate to maximum structurally allowable. Insulate walls with complete coverage and uniform density throughout the accessible wall cavity. Insulating above windows is not required.

Blowing walls: Using a fill tube works well for most mobile home wall cavities.

7.6.3 Sidewall Stuffing Technique

The best materials for this method are batts that are completely encased in breathable polyethylene film. Unfaced batts also work, when installed with a plastic sheet. The smooth plastic sheet allows the batt to slide up the wall against the interior paneling, without snagging or bunching. Some homes don't lend themselves to this technique because of obstructions in the walls.

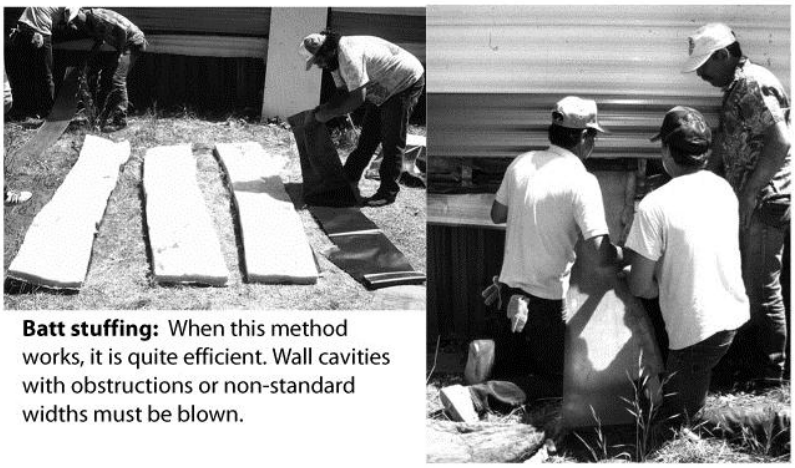

Batt stuffing: When this method works, it is quite efficient. Wall cavities with obstructions or non-standard widths must be blown.

7.7 AIR SEALING

Measure the air leakage in the mobile home by using a blower door. Follow these steps when air sealing a mobile home:

1. Install Health & Safety measures if possible prior to completing air sealing to ensure safety of crews and occupants.
2. Perform non-guideline air sealing after the distribution system has been sealed and the return system rerouted. Seal openings in the mobile home floor around plumbing penetrations and all major attic bypasses typically located around the chimneys for a gas water heater and furnaces. An infrared camera can be used to confirm that no substantial air leakage remains.
3. Perform a Pre-Test blower door test as a starting point for using the cost effective guidelines. Complete air sealing using the WCEG calculations for guidance. Possible WCEG air sealing locations and activities are:
    a. Adjust and weather-strip doors
    b. Replace broken glass in windows
    c. Install fasteners on awning windows to close more tightly
    d. Caulk around window and door trim

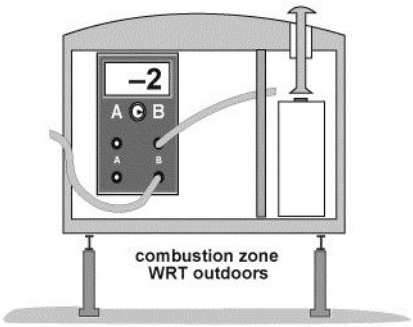

Water-heater worst-case test: Measure depressurization in the water-heater closet from indoors if possible.

4. Conduct building depressurization tests in all units, plus a worst-case draft test on all units with natural-draft combustion appliances.
    a. When the water-heater cabinet has an exterior door, best practice is to insert testing probes via interior pathways. Run the hose through the exterior only when an interior pathway is not available.
    b. Take steps to address depressurization that exceeds the maximum shown in "Mobile Home Depressurization Guideline" table below.

Maximum Depressurization for Combustion Appliance Zones			
Heating Systems			
Appliance Type:	Natural Draft	Induced Draft	Sealed Combustion
Pascals:	-5	-15	-25
Water Heaters			
Appliance Type:	Natural Draft	Direct Vent	
Pascals:	-2	-5	

7.8 Heating Unit Replacement

Replacement furnaces shall be approved for use in mobile homes. Follow current policy for the minimum Annual Fuel Utilization Efficiency (AFUE) rating. Replacement units should fit the footprint of the furnace closet and should not stick out into the hallway.

Follow these steps when installing a new mobile-home furnace:

1. Install properly sized units according to ACCA Manual J or an equivalent sizing formula. Include a copy of the sizing calculation in the customer file.
2. Properly remove and dispose of existing unit.
3. Order and install a new furnace base, unless the existing base matches the new furnace.
4. Support the main duct underneath the furnace with additional strapping, if necessary to hold it firmly in place.

5. Attach the furnace base firmly to the duct connector. Seal all seams between the base, the duct connector, and main duct with mastic and fabric tape.
6. Carefully seal the base plate to the floor, in order to prevent air leakage through the belly and floor.
7. Provide a complete air seal and weather seal around the new chimney and combustion air pipe where it penetrates the roof, ceiling, wall, and/or floor.
8. Provide a complete water-tight weather seal at the roof penetration. Reinforce the area underneath the roofing with plywood or other strong material if necessary to create a strong patch and to prevent a low spot in the roof at the penetration. It is best for any roof patch to be slightly elevated from the surrounding roof, to prevent water collection at the patch.
9. Conduct a combustion test, and confirm that the test results meet manufacturer's specifications.
10. Install a condensate pump, if necessary, to convey the furnace's condensate to an approved sanitary drain per code. See *Condensate Removal in Chapter 3 – Section 3.8.2*.
11. Use existing distribution system and gas supply line.
12. Provide an owner's manual with heating-system replacements.

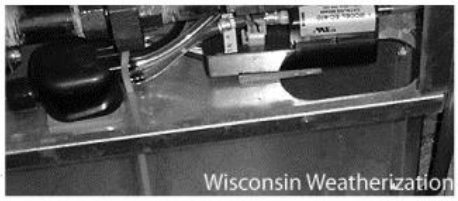

Condensate pumps: These small pumps install in the furnace cabinet.

7.9 Water Heater Replacement

Observe the following standards when replacing a mobile-home water heater:

1. Remove and dispose of the old water heater.
2. Install pressure and temperature relief valve with piping installed through the floor as required by local code.
3. Follow manufacturer's instructions and the National Electric Code to establish a proper electrical connection.
4. Ensure that water lines do not leak.
5. Fill tank with water before turning water heater on.
6. Measure and adjust temperature settings to 120º F as necessary.

7.9.1 Gas Water Heater Installations

The following standards are specific to gas water heater replacements:

1. Measure and adjust gas pressure to follow manufacturer's specifications.
2. Follow manufacturer's venting instructions along with the International Fuel Gas Code to establish a proper venting system.
3. Seal the combustion-air sleeve where it meets the water-heater tank, using an approved sealant, to reduce the likelihood of back drafting.
4. Confirm that the combustion air sleeve is properly sealed and drawing air from outside of the water heater CAZ.
5. Follow manufacturer's instructions to establish a proper combustion-air system.
6. Verify that there are no gas leaks in any of the supply piping.
7. Confirm the presence of a proper sediment trap on the gas line.
8. Test for carbon monoxide.

7.9.2 Exterior Access Water Heater Closets

Follow these steps when addressing exterior access water heater closet:

1. Insulate water heater closet at the exterior closet door and associated wall area. Cover air vents if they are present and route combustion air (for gas units) from underneath the belly or through skirting.
2. Seal the common wall between the living area and water heater.
3. Assure water heater is properly drafting after completing the work.
4. Insulate all water pipes to prevent freeze-up problems.

7.10 Repair

Repairs are measures necessary for the effective performance or preservation of weatherization installations. Specific examples of mobile-home repairs include, but are not limited to, the following:

1. Repair unsafe electrical systems. Re-fasten loose electrical boxes and connections. Establish effective grounding.
2. Repair plumbing leaks that create moisture problems and that waste water. Focus on hot water leaks that also waste fuel. Repair sewage leaks that present a health hazard.

3. Seal roof leaks using efficient and effective roof-patching techniques appropriate for mobile homes.
4. Replace deteriorated windows that cannot be repaired, when listed on MHEA audit for replacement.
5. Repair windows with a cracked or broken pane of glass, but where degradation of the frame and or sash is not substantial. Use tempered glass for doors, sidelights and within 6 feet of bath tubs.
6. Install insider storm windows where missing when listed on MHEA audit,
7. Replace damaged doors when listed on MHEA audit for replacement.
8. Replace exterior water-heater closet access doors that cannot be repaired or air sealed effectively.

7.11 Window Replacement

Install ENERGY STAR® qualified replacement windows, when selected by MHEA audit for replacement as a measure or listed as a repair.

Take the following considerations into account for replacement windows:

1. Replace deteriorated windows with deteriorated frames or sash that cannot be repaired or addressed with an insider storm window.
2. Replace windows only in the primary heating envelope.
3. Photographs should be taken of each window to be replaced. The photograph should document specifically why the window was replaced.

Repairing existing moisture damage and preventing moisture intrusion are the most important issues for window replacement.

1. Complete removal and replacement of windows in a lead safe manner
2. Remove and properly dispose of old window(s) – do not leave on-site.
3. Inspect the condition of rough-opening members before replacing windows. Replace deteriorated, weak, or waterlogged framing members. If evidence of water intrusion exists, attempt to locate and repair the intrusion source.
4. Prepare replacement window by lining the perimeter of the fastening flange with 1/8-inch thick putty tape. Caulk exterior window frame perimeter carefully to wall after installing window. Be particularly careful at the window’s top horizontal joint that the water seal is perfect.

7.12 Interior Storm Windows

Interior storm windows double the R-value of a single-pane window and reduce infiltration, especially in the case of leaky jalousie prime windows. Install interior storm windows on primary single-pane windows that currently have no storm window when selected by MHEA audit for replacement as a measure or listed as a repair. The following types of storm windows can be installed:

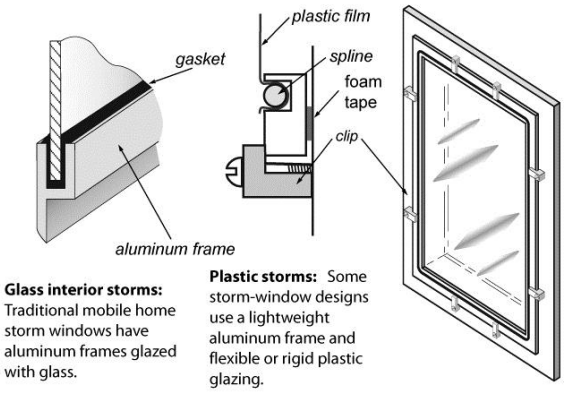

- Install stationary, removable interior storms with awning- and jalousie-style windows.
- Install sliding interior storm windows to match exterior sliding prime windows. Make sure that the movable sash of the storm window is on the same side as the primary window for horizontal sliders.

7.13 Door Replacement

Install minimum R5 or standard mobile home replacement doors when listed on MHEA as a repair. Mobile-home doors come in two basic types: the mobile-home door and the house-type door. Mobile-home doors swing toward the outdoors, and house-type doors swing toward the home's interior. Mobile home doors are usually not standard heights.

Follow these steps when replacing a door on a mobile home:

1. Measure the existing door and frame *before removing them,* to ensure that the replacement door is sized appropriately.
2. Exercise care and caution if removing the existing door trim, to enable trim to be reattached after the new door is installed.
3. Remove and properly dispose of the old door— do not leave it on-site.
4. Install the new door frame plumb and level, using shims as necessary. Detaching the door from the door frame first may make it easier to work with the door frame.
5. Air-seal the space between the rough framing and the door frame. If spray foam is used for air sealing, use minimal expansion foam, since excessive foam expansion can force the door out of level or plumb.
6. Caulk around the door and frame as necessary to prevent water intrusion.
7. Confirm that the new door opens, closes, latches and locks properly.

8. Reattach the door trim.
9. If necessary, install a J-type channel above the door to direct rainwater away from the entry.

Final Inspection and Quality Assurance Standards

Acceptable installations for mobile home measures should reflect the standards in the previous chapters in addition to the standards below.

General Specifications

1. All work follows applicable codes and regulations.
2. All work follows the regulations of all authorities having jurisdiction.
3. All materials are installed to manufacturer specifications.
4. All debris is removed from the job site and properly disposed, recycled, or delivered to a licensed hazardous waste facility, as is appropriate.
5. All applicable building permits were attained.
6. When applicable, all materials must be approved for use in mobile homes.

Heating Systems (see Chapter 3 for general standards)

1. Heating system is approved for mobile homes.
2. Thermostat is located on an interior wall.

Distribution Systems

1. Mobile home return air system is centralized through living space.
2. Sheet metal was used with fasteners to block supply ends that extend beyond the last register and other large holes.
3. Sealing material is not failing.
4. Total measured pressure of supply registers in a mobile home is < 3Pa when HwrtO =50Pa, unless documentation shows no cost effectiveness to continue.
5. Room pressures are < 3Pa when the air handler is operating.

General Repairs

1. The repairs are necessary for the effective installation, performance, and/or preservation of the weatherization materials installed in the building.
2. The repairs are cost-efficient and still correct the problem(s) at hand.

Glass Replacement

1. Glass is the correct type for the installation (e.g. Tempered on doors and sidelights and within six (6) feet of tubs and 18” off of ground or floor, etc.).

Final inspection and Quality Assurance Standards continued

Window Replacement

1. Window installation meets program specifications and is ENERGY STAR certified.
2. The new window opens smoothly and operates properly.
3. The new window is installed squarely, as structurally allowable.
4. The new window does not leak.
5. Installation meets all applicable best practices (e.g. drain planes, back caulked, etc.)
6. Proper lead-safe work practices are documented in file.
7. The customer file contains photographs of the old window, and the photographs demonstrate that the old window met the specifications for replacement.

Door Replacement

1. The new door opens and closes easily, latches tightly, and performs its function.
2. Replacement door meets R-value requirement.
3. Installation meets all applicable best practices (e.g. drain planes, back caulked, etc.)
4. Proper lead-safe work practices are documented in file.
5. The new door does not leak.
6. The new door is installed squarely, as structurally allowable.
7. The customer file contains photographs of the old door, and the photographs demonstrate that the old door met the specifications for replacement.